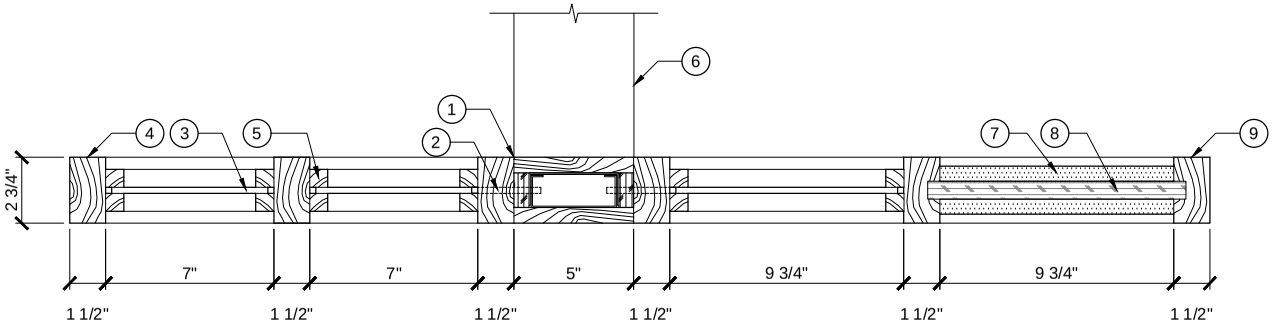

PRIVACY PANEL AT WINDOW - SECTION

0 2" 4" 8"

1. ALIGN SEAMS OF FRONT AND BACK PANELS W/ EDGE OF HALF-WALL BELOW
2. 1/4" STEEL DOWELS @ ALL HORIZONTAL PARTITION MULLION LOCATIONS (TYP. 3 EACH SIDE) - FASTEN TO METAL SUPPORT COLUMN
3. 1/4" TRANSLUCENT ACRYLIC PANEL - SEE FINISH SPECIFICATIONS, DETAIL 7/ 5.1
4. 1 1/2" x 2 3/4" NATURAL MAPLE TRIM, TYPICAL
5. 3/4" REMOVABLE WOOD STOPS W/ MITERED CORNERS, TYPICAL, NATURAL MAPLE
6. PLASTIC LAMINATE TRANSACTION TOP BELOW
7. 5/8" FABRIC WRAPPED TACKABLE MINERAL FIBER PANEL, BOTH SIDES
8. 3/4" PLYWOOD CORE
9. 1 1/2" x 2 3/4" MAPLE TRIM, ROUT AS SHOWN TO ACCEPT PLYWOOD, TYPICAL

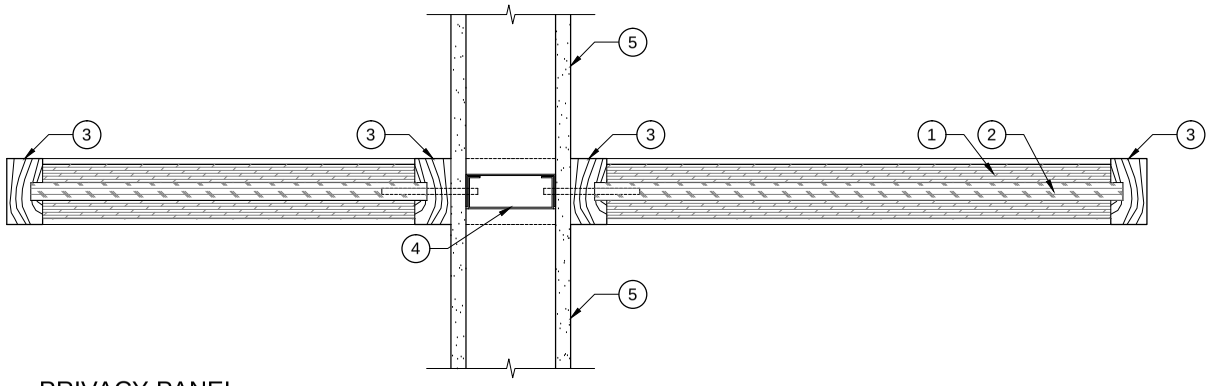

PRIVACY PANEL BELOW COUNTER - SECTION

0 2" 4" 8"

1. 3/4" PLASTIC LAMINATE CLAD PARTICLE BOARD, BOTH SIDES
2. 3/4" PLYWOOD CORE
3. 1 1/2" x 2 3/4" NATURAL MAPLE TRIM, ROUT TO ACCEPT PLYWOOD AS SHOWN
4. 16 GAUGE METAL STUD & TRACK SUPPORT COLUMN, TYPICAL FOR 3 LOCATIONS
5. HALF WALL TO UNDERSIDE OF NEW COUNTERTOPS

MICHIGAN MEDICINE
UNIVERSITY OF MICHIGAN

2101 Commonwealth, Suite B
Ann Arbor, MI 48105
FAX: (734) 763-0417
www.med.umich.edu/facilities/plan

FILE: D064040H-7b.dwg
ISSUE: Aug 10

PRIVACY PANEL - SECTIONS